1、All dimensions in mm [Inch]
2、General tolerance : >10±0.4
<10±0.25
3、Electrical rating : 15A 250/125VAC (UL)10(4)A 250VAC(VDE)
4、Contact resistance : <20mΩ(initial)
5、Insulation resistance : >1000MΩ(500DC between open contacts)
6、Dielectric strength : >1500V 1 minute
7、Mechanical life : >30000 cycles
8、Electrical life: >10000 cycles
9、Temperature rise at the terminal : Max.30℃(UL1054)
10、Solder ability of terminal : Max350℃,3S(no pressure may be placed in the terminals when soldering by hand)
11、Any Cd Pb Hg etc and it's compounds is not include in this product
12、Ambient temperature: T105/55
13、Ambient humidity: Max.85%
14、Degree of protection: IP65
15、Applicability for appliance of class: class Ⅱ
16、Proof tracking resistance index(PTI): 250
17、Degree of pollution: normal

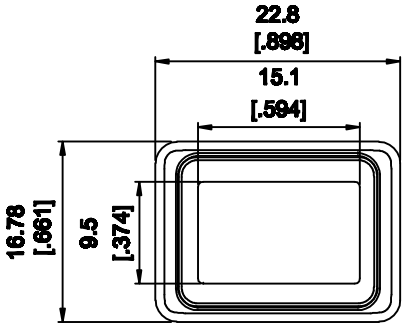

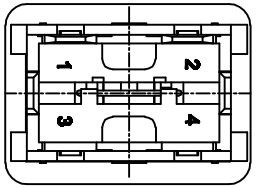

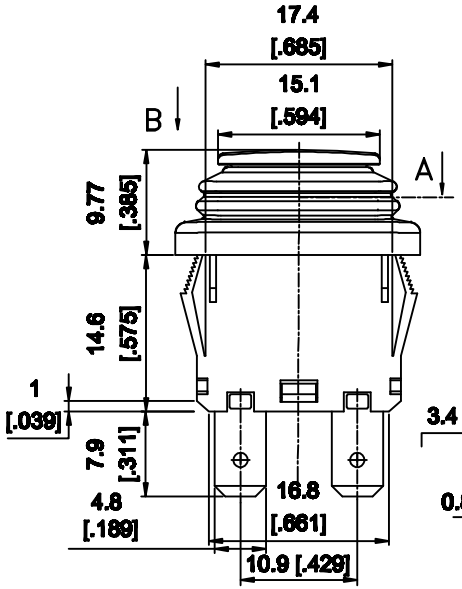

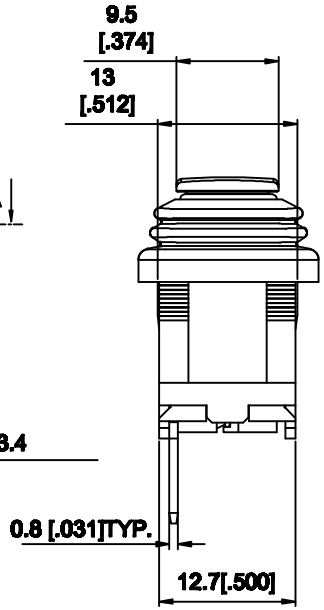

Color	Housing	Actuare
K(Black)		
W(White)		
R(Red)		
G(Gray)		
O(Orange)		
B(Blue)		
Y(Ill. Yellow)		
M(Ill. Green)		
F(Ill. Blue)		
T(Ill. White)		
D(Ill. Red)		

CIRCUIT DPST

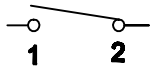

POLE FUNCTION	OPTIONS OF FUNCTION		
	A	——	B
SPST	1-2	——	OFF

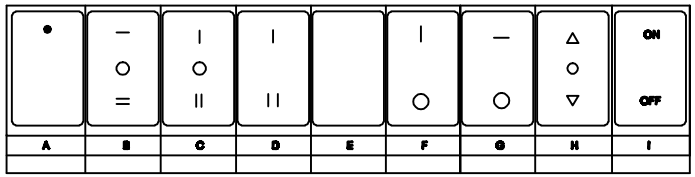

PANEL CUT-OUT		
Z	Y	X
0.7~1.25 [.028~.049]	12.9~13.0 [.508~.512]	19.0~19.1 [.748~.752]
1.25~2.0 [.049~.079]	12.9~13.0 [.508~.512]	19.2~19.3 [.756~.760]
2.0~3.0 [.079~.118]	12.9~13.0 [.508~.512]	19.4~19.5 [.764~.768]

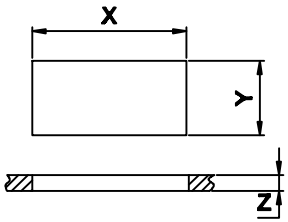

* We keep the right to alter the dimension without notice.

Part No.	LC8301 TOCAP	LIGHT COUNTRY CO.,LTD					
Dwg. NO.	LC-8301-200525						
Series NO.	LC-8301	Drawing	Jiangshengxian	Auditing	Luyanchao		
Dwg Name	Specification	Scale	2:1	Date	05/25/20	Page	